TRIDONIC

EM converterLED BASIC NiCd 50 V Kit

Ausführung BASIC

Product description
_ Kit with emergency lighting LED driver, battery for 3 h duration and indication LED
_ For self-contained emergency lighting
_ For LED modules with a forward voltage of 10 – 54 V
_ SELV for output voltage < 60 V DC
_ Low profile casing (21 x 30 mm cross-section)
_ For luminaire installation
_ EM = Emergency
_ 5 years guarantee (conditions at https://www.tridonic.com/manufacturer-guarantee-conditions)

Properties
_ Non maintained operation
_ 3 h rated duration
_ Compatible with all dimmable and non-dimmable constant current LED driver (see data sheet, LED driver compatibility)
_ 3-pole technology: 2-pole LED module changeover and delayed power switching for the LED driver
_ Automatic shutdown of output if LED load is out of range
_ Constant power output
_ Maximum light output for all LED modules
_ Electronic charge system
_ Deep discharge protection
_ Short-circuit-proof battery connection
_ Polarity reversal protection for battery

Batteries
_ High-temperature cells
_ NiCd batteries
_ D cells
_ 4 year design life
_ 1 year guarantee (conditions at https://www.tridonic.com/manufacturer-guarantee-conditions)

Website
http://www.tridonic.com/89800699

EM converterLED BASIC NiCd 50 V Kit

Ausführung BASIC

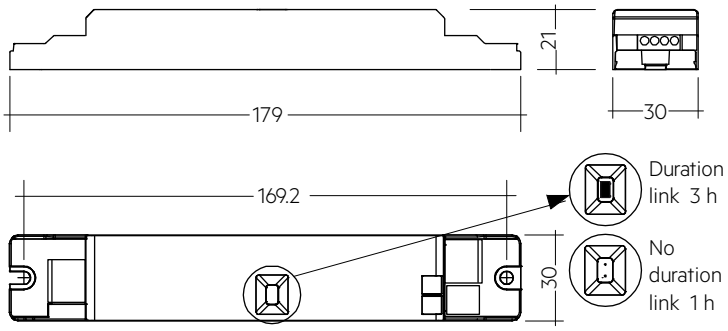

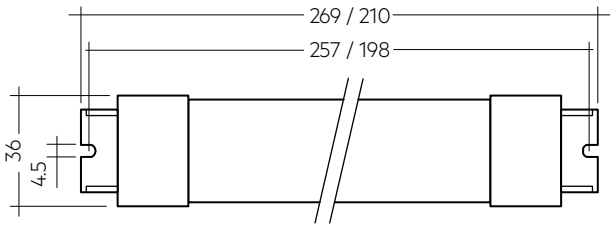

Ordering data

Type	Article number	Rated duration	Packaging, carton	Packaging, pallet	Weight per pc.	Dimensions L x W x H
EM converterLED BASIC 203 NiCd 50V KIT	**89800699**	3 h	25 pc(s).	300 pc(s).	0.483 kg	179 x 30 x 21 mm
EM converterLED BASIC 204 NiCd 50V KIT	**89800678**	3 h	25 pc(s).	300 pc(s).	0.685 kg	179 x 30 x 21 mm

Technical data

Rated supply voltage ①	220 – 240 V
Mains frequency	50 / 60 Hz
Typ. λ (at 230 V, 50 Hz)	0.65C
Forward voltage range LED module EM converterLED 204 50V	10 – 54 V
Output current	Refer to data sheet
Starting time	< 0.25 s from detection of emergency event
Overvoltage protection	320 V (for 48 h)
U-OUT EM converterLED 204 50V	60 V
Battery charging time ②	24 h
Ambient temperature ta	-5 … +55 °C
Max. casing temperature tc	75 °C
Mains voltage changeover threshold	According to EN 60598-2-22
Type of protection	IP20
Guarantee (conditions at www.tridonic.com)	5 Year(s)
Dimensions L x W x H	179 x 30 x 21 mm

① These values are only valid for EM converterLED BASIC. For battery values see data sheet EM converterLED BASIC NiCd-NiMH 50V.
② 16 h battery charging time for 2 h emergency lighting function according to AS 2293.

Status indication green LED EM CON

Accessory

Product description

- A green LED indicates that charging current is flowing into the battery
- 0.3 / 1.0 m cable length
- Plug connection

Website
http://www.tridonic.com/89800271

Ordering data

Type	Article number	Packaging, bag	Packaging, carton	Weight per pc.
LED EM green, HO 1.0 m CON	**89800271**	25 pc(s).	200 pc(s).	0.015 kg